TR ELECTRONIC GmbH
Eglishalde 6
D-78647 Trossingen
Tel. +49 - (0) 74 25 / 228 - 0
Fax +49 - (0) 74 25 / 228 - 33
Germany

Absolute-Encoder CE-65-S A

- **Small and Compact**
- **Single Turn**
- **Analog Output with 14 Bit D/A Converter 0-20mA or -10 to +10V**
- **SSI (Synchronous Serial Interface)**
- **Programmable Encoder Parameters**

5

Electrical Data

Encoder Capacity	max. 13 Bit
* Steps per Revolution	8192 Steps / Rev
Number of Revolutions	1 Revolution
Supply Voltage	11-27 V DC
Power Dissipation (No Load)	< 4 Watt
Programmable via RS485	PC IBM compatible EPROG Software
* Analog Voltage Output (14 Bit D to A Converter)	-10 to +10V, 0 - 10V
Impedance	min. 500 Ω
* Analog Current Output (14 Bit D to A Converter)	0 - 20 mA
Impedance	max. 500 Ω
SSI Interface	
Clock Input	Opto Coupler Isolated
Clock Frequency	95 kHz - 1 MHz
Transmission Cable Length	Dependent on Cable Cross Section, Shielding, Clock Frequency etc.…
Data Output	RS422 (2 wire)
* Output Format	Standard, Tree Format, with Repetition
* Output Code (programmable)	Binary, BCD, Gray, Shifted Gray, Excess3, Shifted Excess3
Input Options	
* Preset 1	Adjust absolute position to a given set value (i.e. zero set)
* Latch	Freezes the analog output data
* Polarity	Changes polarity of analog voltage value
Logic Levels	"0" < +2 VDC, "1" > + 8 VDC, max. 30 VDC
Pin Configuration	Upon Request

* Programmable Parameters

Environmental Data

Electromagnetic compatibility (EMC)	EN 61000-4-2 (IEC-801-2) / EN 61000-4-4 (IEC-801-4)
Operating Temperature	0°-60°C (32° to 140° F) / (Optional -20° to +70°C) (-4° to 158° F)
Extended Temperature (Optional)	-30° to +80°C (-22° to 176°F)
Relative Humidity	98 % (non condensing)
* Protection Class	IP 65 (DIN 40 050)

* The protection class of the encoder can be effected by the type of connector used.

Changes reserved

TR ELECTRONIC GmbH
Eglishalde 6
D-78647 Trossingen
Tel. +49 - (0) 74 25 / 228 - 0
Fax +49 - (0) 74 25 / 228 - 33
Germany

Absolute-Encoder CE-65-S A

Mechanical Data

Maximum Rotational Speed	6000 RPM
Maximum Load on Shaft	40 N Axial, 60 N Radial (at end of shaft)
Lifetime on Bearings	3.9×10^{10} Revolutions at:
-Operational Speed	3000 RPM
-Load on Shaft	20 N Axial, 30 N Radial (at end of shaft)
-Operating Temperature	60°C (140°F)
Weight	0.7 kg (1.5 lb.)
Maximum Angular Acceleration	$\leq 10^4$ rad/s^2
Momentum of Inertia	2.5×10^{-6} kg m^2
Startup Momentum at 20°C (68°F)	2 Ncm
Vibration (50-2000 Hz Sinusoidal)	
DIN IEC 68-2-6	$\leq$ 100 m/s^2 (10g)
Shock (11ms) DIN IEC 68-2-27	$\leq$ 1000 m/s^2 (100g)
Standard Connector	12 pin Contact Connector - Axial

Dimensional Drawing

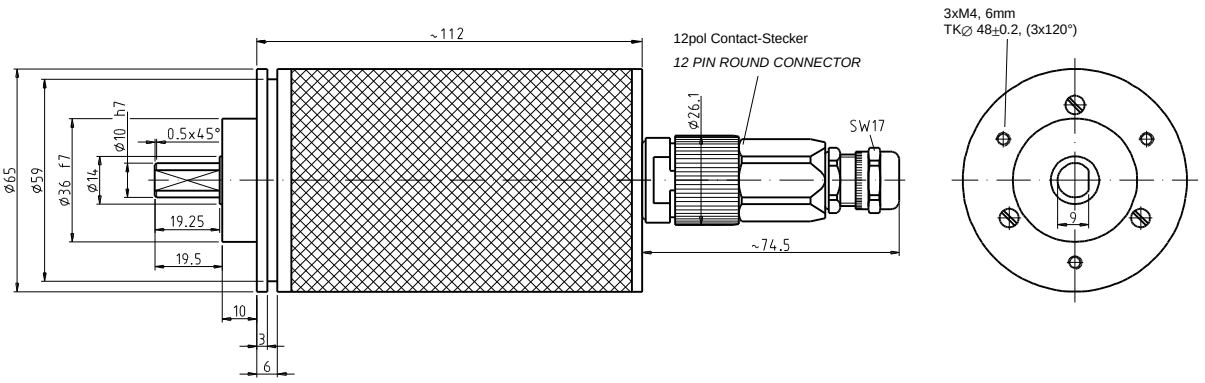

Changes reserved